Technical Data

Specifications & Capacities

HTC 8660

Series II

Telescopic Boom Truck Crane

60 ton *(50.0 metric ton)*

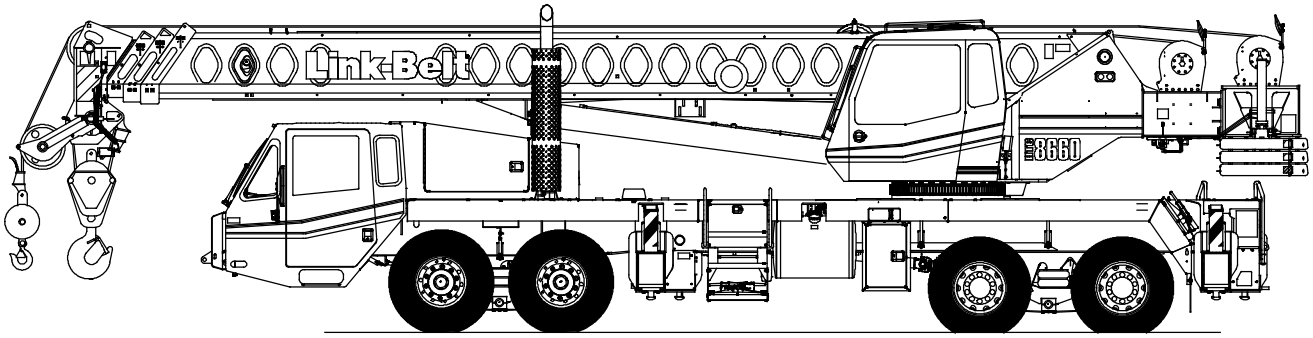

CAUTION: This material is supplied for reference use only. Operator must refer to in – cab Crane Rating Manual and Operator's Manual to determine allowable crane lifting capacities and assembly and operating procedures.

Table Of Contents

Boom, Attachments, and Upper Structure **1**
Boom 1
Boom Head 1
Boom Elevation 1
Auxiliary Lifting Sheave – Optional 1
Hook Blocks and Balls – Optional 1
Fly – Optional 1
Upper Operator's Cab and Controls 1
Swing 2
Electrical 2
Load Hoist System 3
Load Hoist Performance 3
2M Main and Optional Auxiliary Winches 3
Hydraulic System 3
Counterweight 3
Carrier **4**
General 4
Outriggers 4
Steering and Axles 4
Suspension 4
Tires and Wheels 4
Brakes 4
Electrical 4
Engine 4
Transmission 4
Carrier Speeds and Gradeability 5
Fuel Tank 5
Hydraulic System 5
Pump Drive 5
Lower Cab and Controls 6
Additional Equipment 6
Axle Loads **7**
Axle Loads with 2 – Axle Boom Dolly **8**
General Dimensions **9**
Working Range Diagram **10**
Boom Extend Modes **11**

Main Boom Lift Capacity Charts – Standard **12**
11,500 lb Counterweight – Fully Extended Outriggers – 360° Rotation 12
11,500 lb Counterweight – On Tires – Stationary – Boom Centered Over Rear 13
11,500 lb Counterweight – On Tires – Pick & Carry (1 mph) – Boom Centered Over Rear 13
Main Boom Lift Capacity Charts – Optional **14**
15,100 lb Counterweight – Fully Extended Outriggers – 360° Rotation 14
15,100 lb Counterweight – On Tires – Stationary – Boom Centered Over Rear 15
15,100 lb Counterweight – On Tires – Pick & Carry (1 mph) – Boom Centered Over Rear 15
Fly Attachment Lift Capacity Charts – Optional **16**
11,500 lb Counterweight – Fully Extended Outriggers – 360° Rotation 16
15,100 lb Counterweight – Fully Extended Outriggers – 360° Rotation 17
Main Boom Lift Capacity Charts – Optional (Metric) **18**
5 215kg Counterweight – Fully Extended Outriggers – 360° Rotation 18
5 215kg Counterweight – On Tires – Stationary – Boom Centered Over Rear 19
5 215kg Counterweight – On Tires – Pick & Carry (1.6km/h) – Boom Centered Over Rear 19
6 850kg Counterweight – Fully Extended Outriggers – 360° Rotation 20
6 850kg Counterweight – On Tires – Stationary – Boom Centered Over Rear 21
6 850kg Counterweight – On Tires – Pick & Carry (1.6km/h) – Boom Centered Over Rear 21
Fly Attachment Lift Capacity Charts – Optional (Metric) **22**
5 215kg Counterweight – Fully Extended Outriggers – 360° Rotation 22
6 850kg Counterweight – Fully Extended Outriggers – 360° Rotation 23

Boom, Attachments, and Upper Structure

■ Boom

Design – Four section, box type construction of high tensile steel consisting of one base section and three telescoping sections. The vertical side plates have diamond shaped impression for superior strength to weight ratio. The first telescoping section extends independently by means of one double–acting, single stage hydraulic cylinder with integrated holding valves. The second and third telescoping sections extend proportionally by means of one double–acting, single stage cylinder with integrated holding valves and cables.

Boom

- 35.5–110 ft *(10.8–33.5m)* four–section full power boom
- Two mode boom extension: A–max mode provides superior capacities by extending the first telescope section to 60.3 ft *(18.4m)*. Standard mode synchronizes all the telescoping sections proportionally to 110 ft *(33.5m)*. Controlled from operator's cab.
- Mechanical boom angle indicator
- Maximum tip height for A–max mode is 68.8 ft *(21.0m)* and standard mode is 117.4 ft *(35.8m).*

Boom Head

- Four 16.5 in *(41.9cm)* root diameter nylon sheaves to handle up to eight parts of line
- Easily removable wire rope guards
- Rope dead end lugs on each side of the boom head
- Boom head is designed for quick–reeve of the hook block

Boom Elevation

- One double acting hydraulic cylinder with integral holding valve
- Boom elevation: –3° to 78°

Auxiliary Lifting Sheave – Optional

- Single 16.5 in (*41.9m*) root diameter nylon sheave
- Easily removable wire rope guards
- Does not affect erection of the fly or use of the main head sheaves

Hook Blocks and Balls – Optional

- 25 ton (*22.7mt*) 3 sheave quick–reeve hook block with safety latch
- 40 ton (*36.3mt*) 4 sheave quick–reeve hook block with safety latch
- 50 ton (*45.4mt*) 5 sheave quick–reeve hook block with safety latch
- 8.5 ton (*7.7mt*) swivel and non–swivel hook balls with safety latch

Fly – Optional

- 28.5 ft *(8.7m)* one piece lattice fly, stowable, offsettable to 2°, 20°, and 40°. Maximum tip height is 144.8 ft *(44.1m)*.
- 28.5–51 ft *(8.7–15.5m)* two piece bi–fold lattice fly, stowable, offsettable to 2°, 20° and 40°. Maximum tip height is 166.9 ft *(50.9m).*

■ Upper Operator's Cab and Controls

Environmental Cab – Fully enclosed, one person cab of galvaneal steel structure with acoustical insulation. Equipped with:

- Tinted and tempered glass windows
- Extra–large fixed front window with windshield wiper and washer
- Swing up roof window with windshield wiper
- Sliding left side door with large fixed window
- Sliding rear and right side windows for ventilation
- Six way adjustable, cushioned seat with seat belt and storage compartment
- Diesel fired warm–water heater with air ducts for front windshield defroster and cab floor
- Defroster fan for the front window
- Bubble level
- Circulating fan
- Adjustable sun visor
- Dome light
- Cup holder
- Fire extinguisher
- Left side viewing mirror
- Pull–out cabwalk
- Two position travel swing lock

Air Conditioning – Optional – Integral with cab heating system utilizing the same ventilation outlets

Armrest Controls – Two dual axis hydraulic joystick controllers or optional single axis hydraulic controllers for:

- Swing
- Boom hoist
- Main rear winch
- Auxiliary front winch – optional
- Drum rotation indication
- Drum rotation indicator activation switch
- Swing park brake switch
- Winch high/low speed and disable switch(es)
- Diesel particulate filter switch (EPA 2007 Engine Only)
- Telescope override switch
- Warning horn button

Outrigger Controls – Hand held control box with umbilical cord gives the operator the freedom to view operation while setting the outriggers.

Drive and Steer Controls – Optional – Hand held control box with umbilical cord gives the operator the ability to drive and steer the crane at low speed from the operator's cab.

Foot Controls

- Boom telescope
- Swing brake
- Engine throttle
- Carrier service brake – optional

Right Front Console – Controls and indicators for:
- Engine ignition
- Engine throttle lock
- Pump enable
- Function disable
- Front windshield wiper and washer
- Cab floodlights
- Warning horn
- Heating controls
- Console dimmer switch
- Bubble level
- 12 volt power connection
- Air conditioning – optional
- Boom floodlight – optional
- Rotating beacon or strobe light switch – optional
- Carrier park brake – optional
- Third wrap selector switch – optional

Cab Instrumentation – Ergonomically positioned, analog instrumentation for crane operation including:
- Check and stop engine indicators
- Low air pressure warning indicator
- Swing park brake indicator
- Diesel particulate filter indicator (2007 EPA Engine Only)
- High exhaust temperature indicator (2007 EPA Engine Only)
- Engine coolant temperature with warning indicator
- Hydraulic oil temperature with warning indicator
- Fuel level
- Tachometer

Rated Capacity Limiter – Microguard graphic audio – visual warning system integrated into the dash with anti – two block and function limiter. Operating data available includes:
- Crane configuration
- Boom length and angle
- Boom head height
- Allowed load and % of allowed load
- Boom angle
- Radius of load
- Actual load
- Operator settable alarms (include):
  - Maximum and minimum boom angles
  - Maximum and minimum tip height
  - Maximum boom length
  - Left/right swing positions
  - Operator defined area (imaginary plane)

Internal RCL Light Bar – Optional – Visually informs the operator when crane is approaching maximum load capacity with a series of green, yellow, and red lights.

External RCL Light Bar – Optional – Visually informs the ground crew when crane is approaching maximum load capacity with a series of green, yellow, and red lights.

■ Swing

Motor/Planetary – Bi – directional hydraulic swing motor mounted to a planetary reducer for 360° continuous smooth swing at 2.5 rpm.

Swing Park Brake – 360°, electric over hydraulic, (spring applied/hydraulic released) multi – disc brake mounted on the speed reducer. Operated by a switch from the operator's cab.

Swing Brake – 360°, foot operated, hydraulic applied disc brake mounted to the speed reducer.

Swing Lock – Two – position swing lock (boom over front or rear) operated from the operator's cab.

360° Positive Swing Lock – Optional – Meets New York City requirement.

■ Electrical

Swing Alarm – Audio warning device signals when the upper is swinging.

Lights
- Two working lights on front of the cab
- One rotating amber beacon on top of the cab – optional
- One amber strobe beacon on top of the cab – optional
- Boom floodlight – optional

■ Load Hoist System

Load Hoist Performance

Main (Rear) and Auxiliary (Front) Winches – 5/8 in (*16mm*) Rope										
	Maximum Line Pull		Normal Line Speed		High Line Speed		Layer		Total	
Layer	lb	*kg*	ft/min	*m/min*	ft/min	*m/min*	ft	*m*	ft	*m*
1	15,871	*7 199*	166	*50.5*	329	*100.2*	97	*29.6*	97	*29.6*
2	14,356	*6 512*	183	*55.8*	364	*110.8*	108	*32.6*	205	*62.5*
3	13,104	*5 944*	201	*61.2*	398	*121.4*	117	*36.0*	322	*98.1*
4	12,054	*5 468*	218	*66.5*	433	*132.0*	128	*39.0*	450	*137.2*
5	11,159	*5 062*	236	*71.8*	468	*142.6*	139	*42.1*	589	*179.5*
6	10,388	*4 712*	253	*77.2*	502	*153.2*	148	*45.1*	737	*224.6*

Wire Rope Application		Diameter		Type	Maximum Permissible Load	
		in	*mm*		lb	*kg*
Main (Rear) Winch	Standard	5/8	*16*	6x19 IWRC – right regular lay (Type DB)	11,770	*5 338.8*
	Optional	5/8	*16*	18x19 rotation resistant – right regular lay (Type RB)	9,080	*4 118.6*
Auxiliary (Front) Winch	Standard	5/8	*16*	6x19 IWRC – right regular lay (Type DB)	11,770	*5 338.8*
	Optional	5/8	*16*	18x19 rotation resistant – right regular lay (Type RB)	9,080	*4 118.6*

2M Main and Optional Auxiliary Winches

- Axial piston, full and half displacement (2–speed) motors driven through planetary reduction unit for positive control under all load conditions.
- Grooved lagging
- Power up/down mode of operation
- Hoist drum cable follower – optional
- Drum rotation indicator
- Drum diameter: 10.63 in (*27.0cm*)
- Rope length:
  - Main: 550 ft (*167.6m*)
  - Auxiliary: 450 ft (*137.2m*) or 550 ft (*167.6m*)
- Terminator style socket and wedge

Third wrap indicator – optional – Visually and audibly warns the operator when the wire rope is on the first/bottom layer and when the wire rope is down to the last three wraps.

■ Hydraulic System

Counterbalance Valves – All hoist motors, boom extend cylinders, and boom hoist cylinder are equipped with counterbalance valves to provide load lowering and to prevent accidental load drop if hydraulic power is suddenly reduced.

Hydraulic Oil Cooler – Carrier mounted cooler removes heat from the hydraulic oil. Cooler is integral to the engine radiator/ charge air cooler.

Boom Hoist Float Valves (Optional) – For transporting the boom over the rear of the crane with a boom dolly. Allows hydraulic oil within the boom hoist cylinder to flow between piston side and rod side, allowing the boom to float while on the boom dolly.

Swing Brake Release – For transporting the boom over the rear of the crane with a boom dolly. Holds the 360° swing park brake in the released position allowing free rotation of the upper structure.

■ Counterweight

Standard – 11,500 lb *(5 216kg)* total counterweight consisting of two, hydraulically removable 3,600 lb *(1 633kg)* counterweights with capacities for 4,300 lb *(1 950kg)* and 7,900 lb *(3,583kg)* counterweight configurations. Assembled and disassembled by hydraulic cylinders controlled from both sides of the upper structure.

Optional – 3,600 lb *(1 633kg)* in addition to standard counterweight for a total of 15,100 lb *(6 849kg)*.

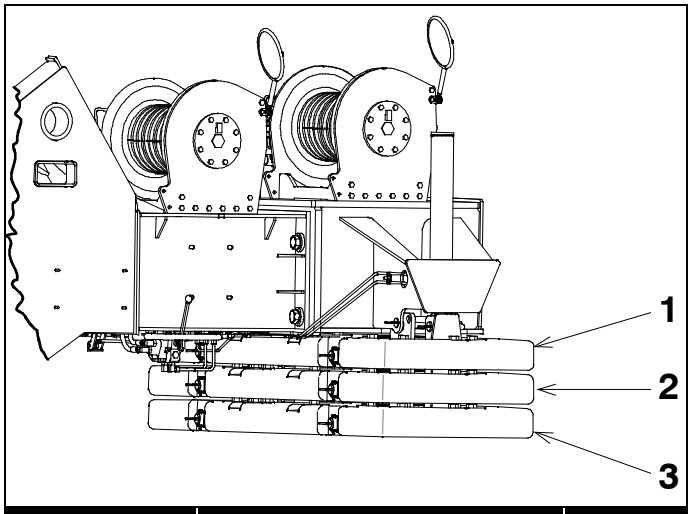

Counterweight Usage Combinations	Standard			Optional
	4,300 lb *(1 950kg)*	7,900 lb *(3 583kg)*	11,500 lb *(5 216kg)*	15,100 lb *(6 849kg)*
1		X	X	X
2			X	X
3				X

Carrier

General

- 8 ft 6 in (2.6 m) wide
- 23 ft 10 in (*7.26m*) wheelbase (centerline of first axle to centerline of fourth axle)
- **Frame** – Box–type, torsion resistant, welded construction made of high tensile steel. Equipped with front and rear towing and tie–down lugs, tow connections, and access ladders.

Outriggers

Boxes – Two double box, front and rear welded to the carrier frame.

Beams and Jacks – Four single stage beams with Confined Area Lifting Capacities (CALC) provide selectable outrigger extensions of full, intermediate, and retracted positions. Jacks with integral check valve, hydraulically controlled from the operator's cab and on both sides of carrier. A fifth front bumper outrigger with integral check valve is hydraulically controlled from the operator's cab and at the front bumper of carrier.

Pontoons – Four lightweight, stow'n go, 23.5" x 27.25" (*59.7 x 69.2cm*) hexagonal steel pontoons with a contact area of 485 in^2 (*3 129*cm^2) can be stored for road travel in either the storage racks on the carrier or under the outrigger boxes.

Main Jack Reaction – 76,000 lb (*34 473.0kg*) force and 157 psi (*1 082.5kPa*) ground bearing pressure

Steering and Axles

- Sheppard full integral master gear/slave gear steering system provides hydraulic assisted steering with mechanical link between steering wheel and wheels
- **Drive** – 8 x 4 for on/off–highway travel
- **Axle 1 & 2** – Tandem steered, non–driven
- **Axle 3 & 4** – Tandem non–steered, driven with reduction: 5.38 to 1
- **Inter–Axle Differential Lock** – Traction adding device that locks axle 3 with axle 4. Operated by a switch from the carrier cab.

Suspension

Front – Raydan Air Link walking beam air suspension

Rear – Raydan Air Link walking beam air suspension

- **Axle Lift System – Optional** – Improves rear tire ground clearance when the crane is up on outriggers. The rear air suspension can be raised or lowered with a switch in the carrier cab. The axle lift system can be controlled with a switch on both sides of the carrier.

Tires and Wheels

Front – Four (single) 425/65R22.5 tires on aluminum disc wheels

Rear – Eight (dual) 11R22.5 tires on aluminum outer/steel inner disc wheels

- Spare tires and wheels – optional
- Tire inflation kit – optional

Brakes

Service – Full air anti–lock (ABS) brakes on all wheel ends. Dual circuit compressed air system with air dryer.

Parking/Emergency – Spring loaded type, acting on 3rd and 4th axles automatically apply when air pressure drops below 40 psi (*275.8kPa*) in both circuits.

Electrical

Battery – Three batteries provide 12 volt starting and operation

Lights

- Front lighting includes two main headlights, two high beam lights, two parking/directional indicators, and three cab marker lights.
- Side lighting includes three parking/directional indicators per side.
- Rear lighting includes two parking/directional indicators, two parking/brake lights, two reverse lights, three marker lights, and a license plate light.
- Other equipment includes hazard/warning system, cab light, instrument panel light, and signal horn.
- One amber strobe beacon on top of the cab – optional
- Daytime running lights – optional

Engine

Specification	Caterpillar C13	Cummins QSM
Emissions Compliance Level:	EPA 2007 (1)	Tier III/Stage IIIA(2)
Maximum Allowable Sulfur Content of Fuel (PPM):	15	5000
Numbers of cylinders:	6	6
Cycle:	4	4
Bore and Stroke: inch (*mm*)	5.12 x 6.18 (*130x157*)	4.9 x 5.8 (*125x147*)
Piston Displacement: in^3 (*L*)	763 (*12.5*)	660 (*10.8*)
Max. Brake Horsepower: hp (*kW*)	365 (*272.2*) @ 1,800 rpm 350 (*261.0*) @ 2,100 rpm	400 (*298*) @ 1,800 rpm 375 (*280*) @ 2,100 rpm
Peak Torque: ft lb (*Nm*)	1,350 (*1 830.4*) @ 1,200 rpm	1,400 (*1 898*) @ 1,300 rpm
Alternator: volts – amps	12 – 135	12 – 160
Crankcase Capacity: qt (*L*)	42.4 (*40.1*)	40 (*38*)

- Cruise control
- CAT C13 – Three stage compression brake
  Cummins QSM – Two stage compression brake
- Thermostatically controlled, hydraulically driven radiator fan
- 120 volt engine block heater
- Ether injection system – optional

(1) Complies with EPA emissions standards effective January 2007.
(2) Complies with Tier III and Stage IIIA emissions standards effective January 2006.

Transmission

Automated – ZF AS–TRONIC (no clutch pedal) manual transmission with 12 forward gears and 2 reverse gears.

Carrier Speeds and Gradeability

ZF Astronic			Governed Speed				Gradeability (@ Peak Torque Except Creep @ Idle)	
			EPA 2007		Tier III/Stage IIIA		% Grade	
Gear		Ratio	mph	*km/h*	mph	*km/h*	EPA 2007	Tier III/ Stage IIIA
12th		0.78	60.69	*97.65*	60.45	*97.28*	2.49	2.65
11th		1.00	47.22	*75.97*	47.03	*75.68*	3.72	3.92
10th		1.27	37.27	*59.96*	37.12	*59.73*	5.10	5.34
9th		1.63	28.99	*46.64*	28.87	*46.46*	6.89	7.19
8th		2.10	22.47	*36.16*	22.38	*36.01*	9.17	9.56
7th		2.70	17.49	*28.14*	17.42	*28.03*	12.04	12.54
6th		3.55	13.29	*21.39*	13.24	*21.30*	16.09	16.74
5th		4.57	10.34	*16.64*	10.30	*16.57*	20.89	21.72
4th		5.78	8.16	*13.14*	8.13	*13.08*	26.65	27.71
3rd		7.44	6.35	*10.22*	6.33	*10.18*	34.45	35.81
2nd		9.59	4.92	*7.92*	4.90	*7.88*	44.63	43.10
1st		12.33	3.83	*6.16*	3.82	*6.14*	57.55	43.10
Reverse 1		11.41	4.14	*6.66*	4.12	*6.63*	53.24	43.10
Reverse 2		8.88	5.32	*8.56*	5.30	*8.52*	41.28	42.90
Creep @ idle	**2nd**	9.59	1.64	*2.64*	1.63	*2.62*	27.78	22.05
	1st	12.33	1.27	*2.04*	1.27	*2.04*	35.89	28.52
	Reverse 1	11.41	1.38	*2.22*	1.37	*2.20*	33.18	26.36
	Reverse 2	8.88	1.77	*2.85*	1.77	*2.84*	25.68	20.37

Based on a gross vehicle weight of 78,000 lb (*35 380kg*)

Fuel Tank

One 75 gal (*283.9L*) capacity tank

Hydraulic System

All functions are hydraulically powered allowing positive, precise control with independent or simultaneous operation of all functions.

Main Pumps

- Four fixed displacement gear pumps with automatic disconnect for the main and auxiliary winches, swing, boom hoist, control circuit, and telescope for use when crane is in travel mode
- One fixed displacement gear pump for steering and the front bumper outrigger
- Two fixed displacement gear pumps for engine cooling fan and main outriggers. These pumps also provide flow to the winches and boom hoist for “pick & carry” mode. Operated by a switch in the carrier cab.
- Combined pump capacity of 190 gpm (*719.2Lpm*)

Hydraulic Reservoir – 144 gal (*545.1L*) capacity equipped with sight level gauge. Diffusers built in for deaeration.

Filtration – One 10 micron, full flow, return line filter. All oil is filtered prior to return to reservoir. Accessible for easy filter replacement.

Pump Drive

All pumps are mechanically driven by the diesel engine. Main and auxiliary winches, swing, boom hoist, control circuit, and telescope pumps are mounted to an automatic pump disconnect on the rear of the transmission to aid in cold weather starting as well as to reduce pump wear while traveling.

Lower Cab and Controls

Environmental Cab – Fully enclosed, one person cab of composite structure with acoustical insulation. Equipped with:
- Tinted and tempered glass windows
- Roll down left side window for ventilation
- Sliding rear and right side windows for ventilation
- Windshield wiper and washer
- Six way adjustable and air suspended driver's seat with seat belt
- Two adjustable rear view mirrors
- Engine dependent warm–water heater with air ducts for windshield defroster and cab floor
- Adjustable sun visor
- Dome light
- 12 volt connection
- Fire extinguisher

Air Conditioning – Integral with cab heating system utilizing the same ventilation outlets

Cab Instrumentation – Ergonomically positioned analog instrumentation for driving including:
- Speedometer with odometer, hourmeter, trip odometer, and clock
- Front and rear air pressure with warning indicator
- Engine coolant temperature with warning indicator
- Engine oil pressure with warning indicator
- Voltage indicator with warning indicator
- Fuel level
- Tachometer

Right Side Console – Controls and indicators for:
- Transmission gear shifting
- Transmission digital readout
- Cruise controls
- Engine compression brake controls

Dash Mounted Controls For:
- Carrier lights
- Carrier/upper throttle control
- Engine cooling fan override
- Cab heater/air conditioning
- Console dimmer switch
- Anti–lock brake diagnostic switch
- Diesel particulate filter switch
- Park brake
- Pick & carry switch
- Inter–axle differential lock switch
- Rear axle lift system switch – optional

Dash Mounted Indicator For:
- Check, stop, and service engine
- Turn signal indication
- Park brake
- Cruise activation
- High beam headlights
- Check anti–lock brake system
- Check anti–lock trailer brake system
- Diesel particulate filter indication (EPA 2007 Engine Only)
- High exhaust temperature indication (EPA 2007 Engine Only)

Steering Column Controls For:
- Engine ignition
- Warning horn
- Turn indicators
- High beam headlights
- Steering wheel adjustments
- Intermittent windshield wiper and washer
- Hazard lights

Foot Controls For:
- Carrier service brakes
- Engine throttle

Additional Equipment

Standard:
- Aluminum full deck fenders with mud flaps
- Left and right bubble levels
- Air hose connection ports
- Clearance flags

Optional:
- Pneumatic and electrical quick disconnect connectors mounted on the rear for trailer or boom dolly brakes and lights
- Left side aluminum storage box
- Rear mounted pintle hook

Axle Loads

Base crane with full tank of fuel and 4,300 lb (*1 950.4kg*) counterweight	Gross Vehicle Weight (1)		Front Axles		Rear Axles	
	lb	*kg*	lb	*kg*	lb	*kg*
	65,605	***29 758***	**29,803**	***13 518***	**35,802**	***16 240***
Driver in carrier cab	250	*113*	328	*149*	–78	*–35*
Rear pintle hook	34	*15*	–13	*–6*	47	*21*
Pneumatic and electrical connectors for trailer or boom dolly	11	*5*	–4	*–2*	15	*7*
Carrier aluminum storage box	66	*30*	20	*9*	46	*21*
Air ride lift system – rear axles	52	*24*	7	*3*	45	*20*
Ether injection	7	*3*	7	*3*	0	*0*
Air conditioning – carrier	58	*26*	83	*38*	–25	*–11*
Hoist drum follower – main	75	*34*	–27	*–13*	102	*47*
Auxiliary winch with 450 ft (*137.2m*) of 5/8" (*16mm*) type "DB" rope	351	*159*	–83	*–38*	434	*197*
Hoist drum follower – auxiliary	75	*34*	–16	*–8*	91	*42*
Substitute type "DB" rope with "RB" rope – main	77	*35*	–29	*–13*	106	*48*
Substitute type "DB" rope with "RB" rope – auxiliary	63	*29*	–15	*–7*	78	*35*
Substitute 450 ft (*137.2m*) with 550 ft (*167.6m*) rope – auxiliary	72	*33*	–17	*–8*	89	*40*
Remove 550 ft (*167.6m*) of rope from rear (main) winch	–405	*–184*	154	*70*	–559	*–254*
Remove 450 ft (*137.2m*) of rope from front (auxiliary) winch	–333	*–151*	80	*36*	–413	*–187*
Air conditioner – operator's cab	179	*81*	3	*1*	176	*80*
360° mechanical swing lock	60	*27*	6	*3*	54	*24*
Remote steer	120	*54*	42	*19*	78	*35*
One slab of counterweight on upper	3,582	*1 625*	–1,375	*–624*	4,957	*2 248*
Two slabs of counterweight on upper	7,164	*3 250*	–2,750	*–1 247*	9,914	*4 497*
Three slabs counterweight on upper	10,746	*4 874*	–4,125	*–1 871*	14,871	*6 745*
Floodlight to the front of boom base section	10	*5*	15	*7*	–5	*–2*
Fly mounting brackets to boom base section for fly options	99	*45*	87	*39*	12	*5*
28.5 ft (*8.7m*) offsettable, one–piece lattice fly – stowed	1,238	*562*	1,312	*595*	–74	*–34*
28.5–51 ft (*8.7–15.5m*) offsettable, two–piece (bi–fold) lattice fly – stowed	1,830	*830*	1,810	*821*	20	*9*
Auxiliary lifting sheave	91	*41*	165	*75*	–74	*–34*
25 ton (*22.7mt*) 3–sheave hook block at boom head	670	*304*	1,169	*530*	–499	*–226*
40 ton (*36.3mt*) 4–sheave hook block at boom head	780	*354*	1,360	*617*	–580	*–263*
50 ton (*45.4mt*) 5–sheave hook block at boom head	1,090	*494*	1,901	*862*	–811	*–368*
60 ton (*54.4mt*) 5–sheave hook block at boom head	1,122	*509*	1,957	*888*	–835	*–379*
8.5 ton (*7.7mt*) hook ball at boom head	360	*163*	641	*291*	–281	*–127*
Hook block/ball storage box	375	*170*	–143	*–65*	518	*235*
25 ton (*22.7mt*) 3–sheave hook block in storage box	670	*304*	–256	*–116*	926	*420*
40 ton (*36.3mt*) 4–sheave hook block in storage box	780	*354*	–298	*–135*	1,078	*489*
50 ton (*45.4mt*) 5–sheave hook block in storage box	1,090	*494*	–417	*–189*	1,507	*684*
60 ton (*54.4mt*) 5–sheave hook block in storage box	1,122	*509*	–429	*–195*	1,551	*704*
8.5 ton (*7.7mt*) hook ball in storage box	360	*163*	–138	*–63*	498	*226*

Counterweight Load Transfer	Front Axles		Rear Axles	
	lb	*kg*	lb	*kg*
Transfer one 3,600lb (*1 632.9kg*) slab of counterweight to carrier deck	4,091	*1 856*	–4,091	*–1 856*
Transfer two 3,600lb (*1 632.9kg*) slabs of counterweight to carrier deck	8,182	*3 711*	–8,182	*–3 711*
Transfer three 3,600lb (*1 632.9kg*) slabs of counterweight to carrier deck	12,273	*5 567*	–12,273	*–5 567*

Axle	Maximum Load @ 65 mph (*105km/h*)
Front	45,400 lb (*20 593kg*) – aluminum disc wheels with 425/65R22.5 tires
Rear	47,250 lb (*21 432kg*) – aluminum disc wheels with 11R22.5 tires

(1) Adjust gross vehicle weight and axle loading according to component weight. All weights are ±3%.

Axle Loads with 2 – Axle Boom Dolly

Base crane with full tank of fuel and 4,300 lb (*1 950.4kg*) counterweight	Gross Vehicle Weight (1)		Front Axles		Rear Axles		Dolly Axles	
	lb	*kg*	lb	*kg*	lb	*kg*	lb	*kg*
	65,605	*29 758*	27,790	*12 605*	27,082	*12 285*	10,733	*4 868*
Nelson 2 – axle boom dolly	6,000	*2 722*	0	*0*	0	*0*	6,000	*2 722*
Driver in carrier cab	250	*113*	328	*149*	– 78	*– 35*	0	*0*
Rear pintle hook	34	*15*	– 13	*– 6*	47	*21*	0	*0*
Pneumatic and electrical connectors for trailer or boom dolly	11	*5*	– 4	*– 2*	15	*7*	0	*0*
Carrier aluminum storage box	66	*30*	20	*9*	46	*21*	0	*0*
Air ride lift system – rear axles	52	*24*	7	*3*	45	*20*	0	*0*
Ether injection	7	*3*	7	*3*	0	*0*	0	*0*
Air conditioning – carrier	58	*26*	83	*38*	– 25	*– 11*	0	*0*
Hoist drum follower – main	75	*34*	55	*25*	21	*10*	0	*0*
Auxiliary winch with 450 ft (*137.2m*) of 5/8” (*16mm*) type “DB” rope	351	*159*	215	*98*	136	*62*	0	*0*
Hoist drum follower – auxiliary	75	*34*	44	*20*	32	*14*	0	*0*
Substitute type “DB” rope with “RB” rope – main	77	*35*	58	*26*	19	*9*	0	*0*
Substitute type “DB” rope with “RB” rope – auxiliary	63	*29*	39	*18*	24	*11*	0	*0*
Substitute 450 ft (*137.2m*) with 550 ft (*167.6m*) rope – auxiliary	72	*33*	44	*20*	28	*13*	0	*0*
Remove 550 ft (*167.6m*) of rope from rear (main) winch	– 405	*– 184*	– 305	*– 138*	– 100	*– 45*	0	*0*
Remove 450 ft (*137.2m*) of rope from front (auxiliary) winch	– 333	*– 151*	– 204	*– 93*	– 129	*– 59*	0	*0*
Air conditioner – operator’s cab	179	*81*	64	*29*	115	*52*	0	*0*
360° mechanical swing lock	60	*27*	16	*7*	44	*20*	0	*0*
Remote steer	120	*54*	50	*23*	70	*32*	0	*0*
One slab of counterweight on upper	3,582	*1 625*	2,716	*1 323*	866	*393*	0	*0*
Two slabs of counterweight on upper	7,164	*3 250*	5,432	*2 464*	1,732	*786*	0	*0*
Three slabs counterweight on upper	10,746	*4 874*	8,148	*3 696*	2,598	*1 178*	0	*0*
Floodlight to the front of boom base section	10	*5*	– 1	*– 0.5*	– 1	*– 0.5*	12	*5*
Fly mounting brackets to boom base section for fly options	99	*45*	12	*5*	14	*6*	72	*33*
28.5 ft (*8.7m*) offsettable, one – piece lattice fly – stowed	1,238	*562*	80	*36*	89	*40*	1,069	*485*
28.5 – 51 ft (*8.7 – 15.5m*) offsettable, two – piece (bi – fold) lattice fly – stowed	1,830	*830*	163	*74*	182	*83*	1,484	*673*
Auxiliary lifting sheave	91	*41*	– 18	*– 8*	– 20	*– 9*	130	*59*
40 ton (*36.3mt*) 4 – sheave hook block at boom head	780	*354*	– 138	*– 63*	– 154	*– 70*	1,072	*486*
50 ton (*45.4mt*) 5 – sheave hook block at boom head	1,090	*494*	– 193	*– 88*	– 215	*– 98*	1,498	*679*
60 ton (*54.4mt*) 5 – sheave hook block at boom head	1,122	*509*	– 198	*– 90*	– 221	*– 100*	1,542	*699*
8.5 ton (*7.7mt*) hook ball at boom head	360	*163*	– 68	*– 31*	– 76	*– 34*	504	*229*

Counterweight Load Transfer	Front Axles		Rear Axles		Dolly Axles	
	lb	*kg*	lb	*kg*	lb	*kg*
Transfer one 3,600lb (*1 632.9kg*) slab of counterweight to boom dolly	– 2,716	*– 1 232*	– 866	*– 393*	3,582	*1 625*
Transfer two 3,600lb (*1 632.9kg*) slabs of counterweight to boom dolly	– 5,432	*– 2 464*	– 1,732	*– 786*	7,164	*3 250*
Transfer three 3,600lb (*1 632.9kg*) slabs of counterweight to boom dolly	– 8,148	*– 3 696*	– 2,598	*– 1 178*	10,746	*4 874*

Axle	Maximum Load @ 65 mph (*105km/h*)
Front	45,400 lb (*20 593kg*) – aluminum disc wheels with 425/65R22.5 tires
Rear	47,250 lb (*21 432kg*) – aluminum disc wheels with 11R22.5 tires

(1) Adjust gross vehicle weight and axle loading according to component weight. All weights are ±3%.

General Dimensions

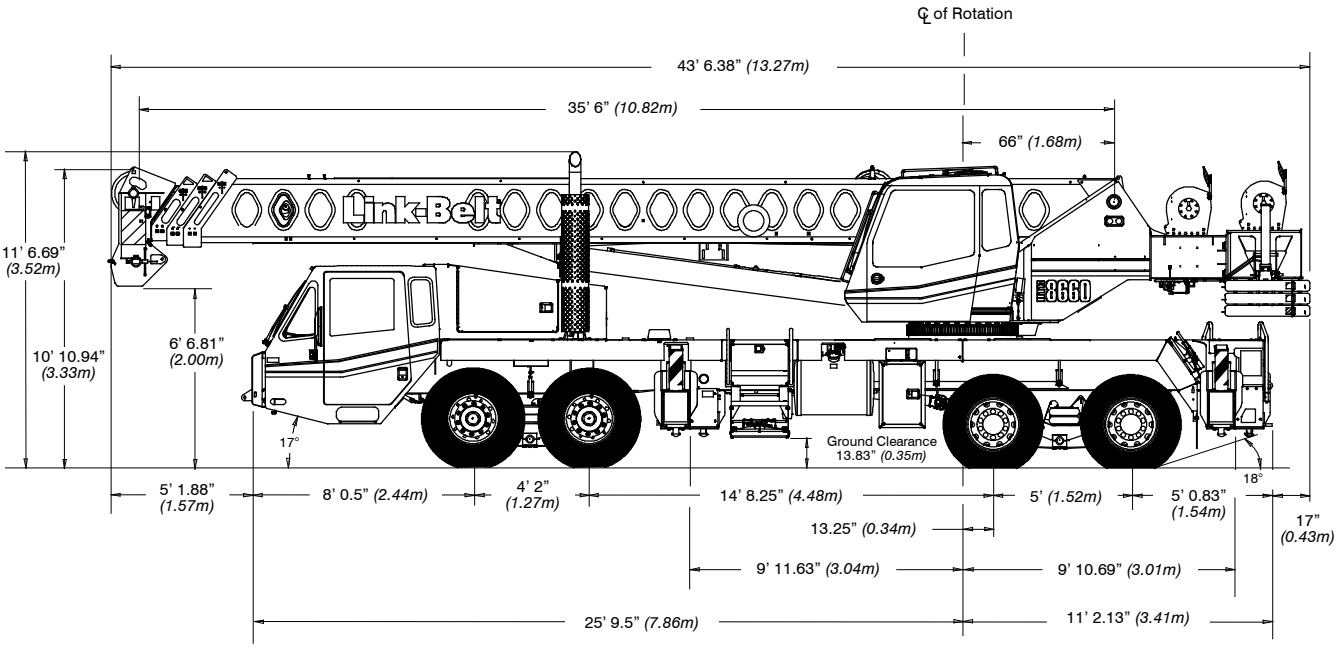

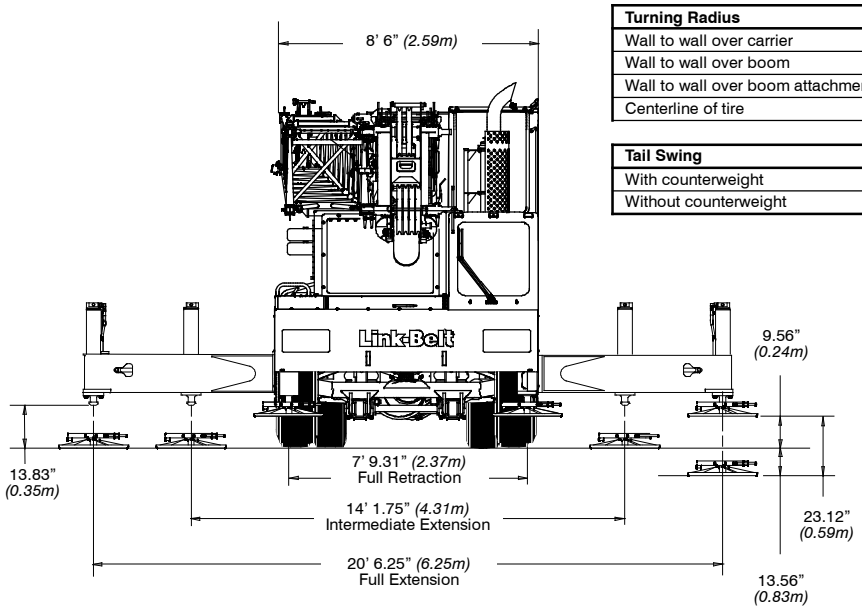

Turning Radius	English	*Metric*
Wall to wall over carrier	44' 1"	*13.4m*
Wall to wall over boom	45' 6"	*13.9m*
Wall to wall over boom attachment	46' 11"	*14.3m*
Centerline of tire	38' 7"	*11.8m*

Tail Swing	English	*Metric*
With counterweight	12' 8.5"	*3.9m*
Without counterweight	12' 5.25"	*3.8m*

Working Range Diagram

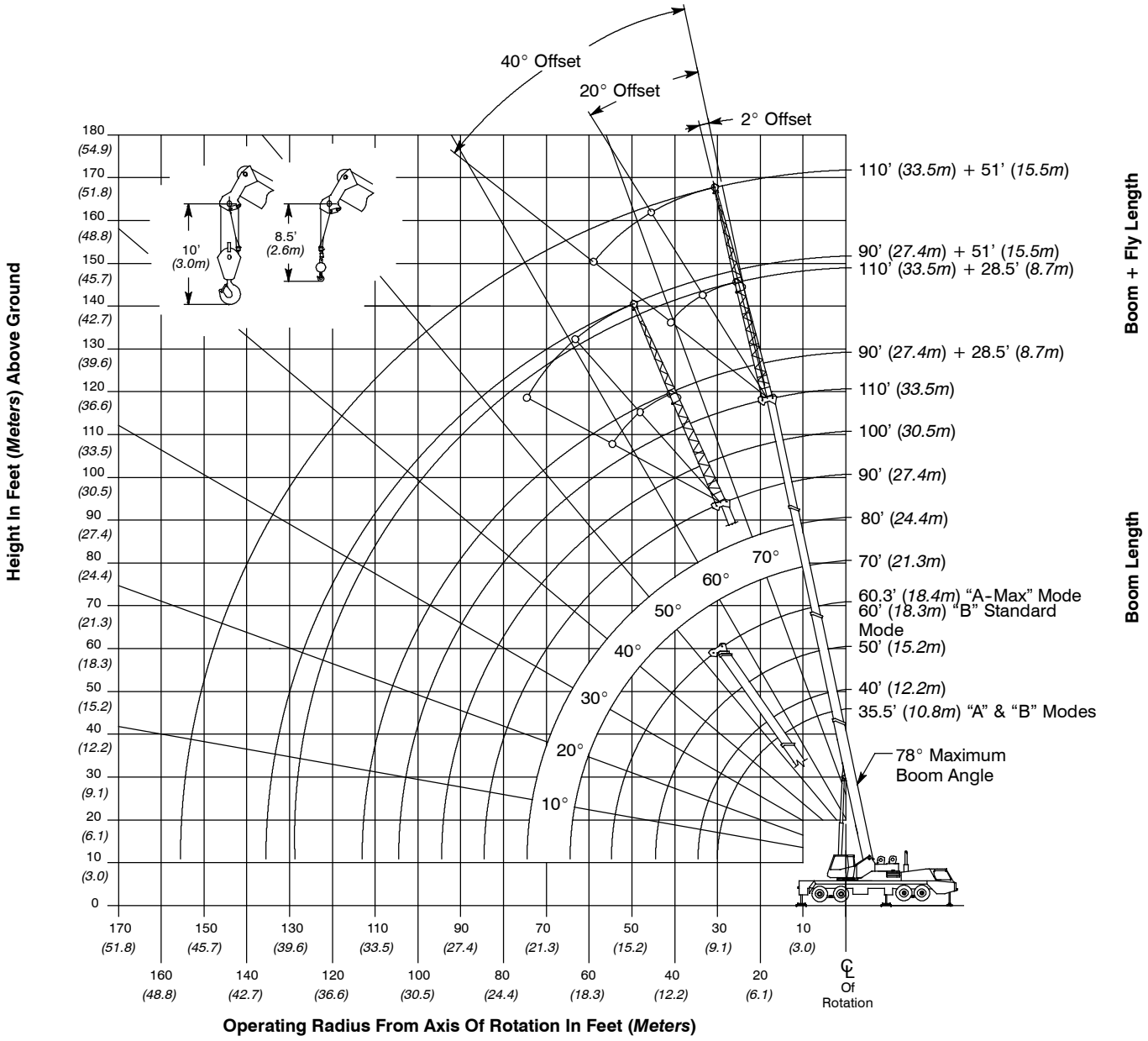

Note: Boom and fly geometry shown are for unloaded condition and crane standing level on firm supporting surface. Boom deflection, subsequent radius, and boom angle change must be accounted for when applying load to hook.

WARNING

Do Not Lower The Boom Below The Minimum Boom Angle For No Load Stability As Shown In The Lift Charts For The Boom Lengths Given. Loss Of Stability Will Occur Causing A Tipping Condition.

Boom Extend Modes

Boom Mode "A" (A – Max)
Only inner mid section telescopes

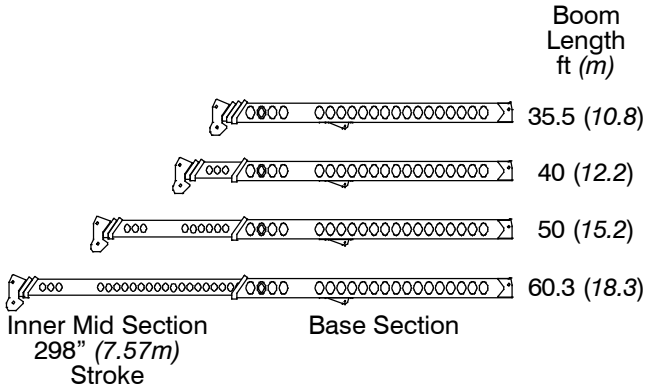

Boom Mode "B" (Standard)
Inner mid, outer mid, and tip sections telescope simultaneously

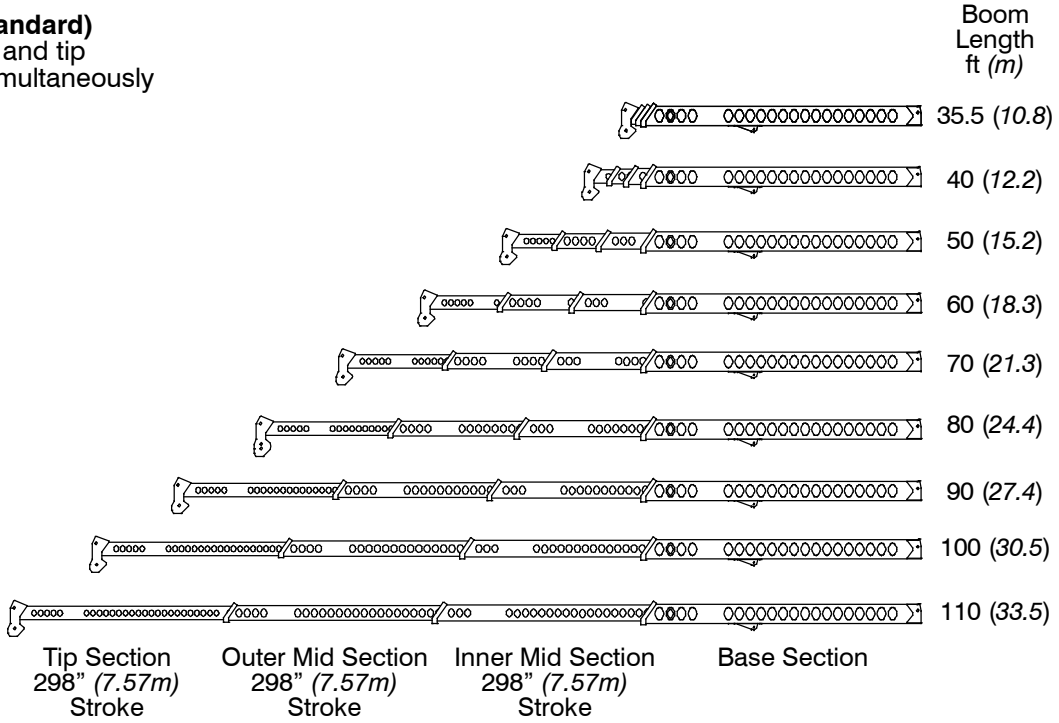

Main Boom Lift Capacity Charts – Standard

11,500 lb Counterweight -- Fully Extended Outriggers -- 360° Rotation
(All Capacities Are Listed In Pounds)

Radius (ft)	Boom Length (ft)									Radius (ft)
	35.5	40	50	60	70	80	90	100	110	
7	120,000*									7
10	100,000	80,900	72,800							10
12	76,000	73,200	65,800	50,900	37,900					12
15	65,800	63,600	57,700	47,300	37,900	35,400				15
20	52,500	52,000	47,500	39,300	37,900	34,700	28,900			20
25	40,500	40,300	40,000	37,900	37,900	34,300	28,300	24,000	19,500	25
30		29,600	30,300	30,600	30,800	30,400	24,900	22,600	19,500	30
35			22,800	23,200	23,400	23,400	22,100	20,100	18,500	35
40			17,700	18,200	18,400	18,500	18,600	18,000	16,500	40
45				14,600	14,800	15,000	15,000	15,100	14,700	45
50				11,900	12,200	12,300	12,400	12,400	12,500	50
55					10,100	10,300	10,400	10,400	10,500	55
60					8,400	8,600	8,700	8,800	8,800	60
65						7,200	7,400	7,400	7,500	65
70						6,000	6,200	6,300	6,400	70
75							5,200	5,300	5,400	75
80							4,400	4,500	4,600	80
85								3,800	3,900	85
90								3,100	3,200	90
95									2,700	95
100									2,200	100

* Special Conditions Or Wire Rope Required

This information is not for crane operation. Operator must refer to the in – cab information for crane operation. Rated lifting capacities shown on fully extended outriggers do not exceed 85% of the tipping loads and on tires do not exceed 75% of the tipping loads.

11,500 lb Counterweight – On Tires – Stationary – Boom Centered Over Rear (All Capacities Are Listed In Pounds)							
Radius (ft)	Boom Length (ft)						Radius (ft)
	35.5	40	50	60	70	80	
10	49,000						10
12	44,800	37,900	23,100				12
15	37,000	37,400	24,500	15,800			15
20	23,600	23,900	24,500	17,600			20
25	16,400	16,700	17,300	17,600	13,300		25
30		12,300	12,800	13,100	13,300	13,200	30
35			9,700	10,100	10,300	10,500	35
40			7,500	7,800	8,100	8,200	40
45				6,200	6,400	6,500	45
50				4,800	5,000	5,200	50
55					4,000	4,100	55
60					3,100	3,200	60
65						2,500	65
70						1,900	70

11,500 lb Counterweight – On Tires – Pick & Carry (1 mph) – Boom Centered Over Rear (All Capacities Are Listed In Pounds)							
Radius (ft)	Boom Length (ft)						Radius (ft)
	35.5	40	50	60	70	80	
10	36,200						10
12	32,900	33,100					12
15	28,800	29,000	24,000				15
20	23,500	23,700	24,000	17,600			20
25	16,400	16,700	17,300	17,600	13,300		25
30		12,300	12,800	13,100	13,300	13,200	30
35			9,700	10,100	10,300	10,500	35
40			7,500	7,800	8,100	8,200	40
45				6,200	6,400	6,500	45
50				4,800	5,000	5,200	50
55					4,000	4,100	55
60					3,100	3,200	60
65						2,500	65
70						1,900	70

This information is not for crane operation. Operator must refer to the in–cab information for crane operation. Rated lifting capacities shown on fully extended outriggers do not exceed 85% of the tipping loads and on tires do not exceed 75% of the tipping loads.

Main Boom Lift Capacity Charts – Optional

15,100 lb Counterweight -- Fully Extended Outriggers -- 360° Rotation
(All Capacities Are Listed In Pounds)

Radius (ft)	Boom Length (ft)									Radius (ft)
	35.5	40	50	60	70	80	90	100	110	
7	120,000*									7
10	100,000	80,900	72,800							10
12	76,000	73,200	65,800	50,900	37,900					12
15	65,800	63,600	57,700	47,300	37,900	35,400				15
20	53,400	52,000	47,500	39,300	37,900	34,700	28,900			20
25	41,900	41,700	40,300	37,900	37,900	34,300	28,300	24,000	19,500	25
30		32,900	33,600	33,900	32,900	30,400	24,900	22,600	19,500	30
35			25,400	25,800	25,900	26,100	22,100	20,100	18,500	35
40			19,900	20,400	20,600	20,700	19,800	18,000	16,500	40
45				16,500	16,700	16,800	16,900	16,200	14,700	45
50				13,500	13,800	13,900	14,000	14,100	13,300	50
55					11,500	11,700	11,800	11,800	11,900	55
60					9,700	9,900	10,000	10,100	10,200	60
65						8,400	8,600	8,600	8,700	65
70						7,100	7,300	7,400	7,500	70
75							6,200	6,300	6,400	75
80							5,300	5,400	5,500	80
85								4,600	4,700	85
90								4,000	4,000	90
95									3,400	95
100									2,900	100

* Special Conditions Or Wire Rope Required

This information is not for crane operation. Operator must refer to the in – cab information for crane operation. Rated lifting capacities shown on fully extended outriggers do not exceed 85% of the tipping loads and on tires do not exceed 75% of the tipping loads.

15,100 lb Counterweight – On Tires – Stationary – Boom Centered Over Rear (All Capacities Are Listed In Pounds)							
Radius (ft)	Boom Length (ft)						Radius (ft)
	35.5	40	50	60	70	80	
10	49,000						10
12	44,800	44,700					12
15	39,600	39,400	29,200				15
20	26,000	26,300	26,900	19,500			20
25	18,200	18,600	19,100	19,500	14,800		25
30		13,800	14,300	14,600	14,800	14,200	30
35			11,000	11,300	11,600	11,700	35
40			8,600	8,900	9,200	9,300	40
45				7,100	7,300	7,500	45
50				5,700	5,900	6,100	50
55					4,700	4,900	55
60					3,800	4,000	60
65						3,200	65
70						2,500	70

15,100 lb Counterweight – On Tires – Pick & Carry (1 mph) – Boom Centered Over Rear (All Capacities Are Listed In Pounds)							
Radius (ft)	Boom Length (ft)						Radius (ft)
	35.5	40	50	60	70	80	
10	36,200						10
12	32,900	33,100					12
15	28,800	29,000	29,200				15
20	23,500	23,700	24,000	19,500			20
25	18,200	18,600	19,100	19,500	14,800		25
30		13,800	14,300	14,600	14,800	14,200	30
35			11,000	11,300	11,600	11,700	35
40			8,600	8,900	9,200	9,300	40
45				7,100	7,300	7,500	45
50				5,700	5,900	6,100	50
55					4,700	4,900	55
60					3,800	4,000	60
65						3,200	65
70						2,500	70

This information is not for crane operation. Operator must refer to the in–cab information for crane operation. Rated lifting capacities shown on fully extended outriggers do not exceed 85% of the tipping loads and on tires do not exceed 75% of the tipping loads.

Fly Attachment Lift Capacity Charts – Optional

11,500 lb Counterweight -- Fully Extended Outriggers -- 360° Rotation
(All Capacities Are Listed In Pounds)

110 ft Main Boom Length 2° Fly Offset			110 ft Main Boom Length 20° Fly Offset			110 ft Main Boom Length 40° Fly Offset		
Radius (ft)	Fly Length (ft)		Radius (ft)	Fly Length (ft)		Radius (ft)	Fly Length (ft)	
	28.5	51		28.5	51		28.5	51
35	9,400		35			35		
40	9,400		40			40		
45	9,400	6,200	45	9,600		45		
50	9,400	6,200	50	9,200		50	7,600	
55	9,300	6,200	55	8,600		55	7,400	
60	8,600	6,200	60	8,000	4,900	60	7,200	
65	8,000	6,100	65	7,400	4,700	65	7,000	
70	7,000	5,800	70	7,000	4,500	70	6,600	
75	6,000	5,400	75	6,500	4,300	75	6,200	3,500
80	5,200	5,000	80	5,600	4,200	80	5,900	3,400
85	4,400	4,700	85	4,800	4,000	85	5,200	3,300
90	3,800	4,300	90	4,200	3,900	90	4,400	3,300
95	3,200	3,700	95	3,600	3,700	95	3,800	3,200
100	2,700	3,200	100	3,000	3,600	100	3,200	3,200
105	2,300	2,700	105	2,500	3,300	105	2,700	3,100
110	1,900	2,300	110	2,100	2,800	110	2,200	3,100
115	1,500	2,000	115	1,700	2,400	115		2,700
120	1,200	1,600	120	1,300	2,000	120		2,300
125		1,300	125		1,700	125		1,900
130			130		1,300	130		1,500
135			135			135		1,100

This information is not for crane operation. Operator must refer to the in – cab information for crane operation. Rated lifting capacities shown on fully extended outriggers do not exceed 85% of the tipping loads and on tires do not exceed 75% of the tipping loads.

15,100 lb Counterweight -- Fully Extended Outriggers -- 360° Rotation (All Capacities Are Listed In Pounds)								
110 ft Main Boom Length 2° Fly Offset			110 ft Main Boom Length 20° Fly Offset			110 ft Main Boom Length 40° Fly Offset		
Radius (ft)	Fly Length (ft)		Radius (ft)	Fly Length (ft)		Radius (ft)	Fly Length (ft)	
	28.5	51		28.5	51		28.5	51
35	9,400		35			35		
40	9,400		40			40		
45	9,400	6,200	45	9,600		45		
50	9,400	6,200	50	9,200		50	7,600	
55	9,300	6,200	55	8,600		55	7,400	
60	8,600	6,200	60	8,000	4,900	60	7,200	
65	8,000	6,100	65	7,400	4,700	65	7,000	
70	7,500	5,800	70	7,000	4,500	70	6,600	
75	7,000	5,400	75	6,500	4,300	75	6,200	3,500
80	6,100	5,000	80	6,200	4,200	80	5,900	3,400
85	5,300	4,700	85	5,700	4,000	85	5,200	3,300
90	4,600	4,400	90	5,000	3,900	90	4,400	3,300
95	4,000	4,100	95	4,300	3,700	95	3,800	3,200
100	3,500	3,900	100	3,700	3,600	100	3,200	3,200
105	3,000	3,400	105	3,200	3,400	105	2,700	3,100
110	2,500	3,000	110	2,700	3,300	110	2,200	3,100
115	2,200	2,600	115	2,300	3,000	115		3,000
120	1,800	2,200	120	1,900	2,600	120		2,800
125	1,500	1,900	125	1,500	2,200	125		2,400
130	1,200	1,600	130		1,900	130		2,000
135		1,300	135		1,600	135		1,700
140			140		1,300	140		

This information is not for crane operation. Operator must refer to the in–cab information for crane operation. Rated lifting capacities shown on fully extended outriggers do not exceed 85% of the tipping loads and on tires do not exceed 75% of the tipping loads.

Main Boom Lift Capacity Charts – Optional (Metric)

5 215kg Counterweight – Fully Extended Outriggers – 360° Rotation
(All Capacities Are Listed In Kilograms)

Radius (m)	Boom Length (m)									Radius (m)
	10.82	12.2	15.2	18.3	21.3	24.4	27.4	30.5	33.53	
2.5	50 000									2.5
3	45 360	17 150	17 150							3
3.5	35 200	17 150	17 150							3.5
4	32 600	17 150	17 150	17 150	17 150					4
4.5	30 200	17 150	17 150	17 150	17 150					4.5
5	28 050	17 150	17 150	17 150	17 150	16 050				5
6	24 200	17 150	17 150	17 150	17 150	15 700	13 100			6
7	19 850	17 150	17 150	17 150	17 150	15 700	13 100	10 850		7
8	15 100	15 350	15 550	15 700	15 800	15 100	12 450	10 850	8 800	8
9	11 950	12 200	12 450	12 600	12 650	12 750	11 450	10 350	8 800	9
10		9 950	10 300	10 400	10 500	10 550	10 550	9 550	8 800	10
12			7 300	7 500	7 550	7 600	7 650	7 650	7 600	12
14				5 600	5 700	5 750	5 800	5 800	5 850	14
16				4 300	4 450	4 500	4 550	4 550	4 600	16
18					3 450	3 550	3 600	3 600	3 650	18
20						2 800	2 850	2 900	2 950	20
22						2 250	2 300	2 350	2 350	22
24							1 850	1 850	1 900	24
26								1 500	1 500	26
28								1 150	1 200	28
30									900	30

This information is not for crane operation. Operator must refer to the in–cab information for crane operation. Rated lifting capacities shown on fully extended outriggers do not exceed 75% of the tipping loads and on tires do not exceed 65% of the tipping loads.

5 215kg Counterweight -- On Tires -- Stationary -- Boom Centered Over Rear
(All Capacities Are Listed In Kilograms)

Radius (m)	Boom Length (m)						Radius (m)
	10.82	12.2	15.2	18.3	21.3	24.4	
3	22 400						3
3.5	20 800	17 150					3.5
4	17 950	17 150					4
4.5	14 900	15 050	9 850				4.5
5	12 650	12 800	9 850				5
6	9 500	9 650	9 850	7 900			6
7	7 400	7 550	7 750	7 900			7
8	5 900	6 050	6 250	6 400	5 350		8
9	4 800	4 950	5 150	5 300	5 350	5 400	9
10		4 100	4 300	4 450	4 500	4 600	10
12			3 050	3 150	3 250	3 300	12
14				2 300	2 400	2 450	14
16				1 650	1 750	1 800	16
18					1 250	1 350	18
20						950	20
22						650	22

5 215kg Counterweight -- On Tires -- Pick & Carry (1.6km/h) -- Boom Centered Over Rear
(All Capacities Are Listed In Kilograms)

Radius (m)	Boom Length (m)						Radius (m)
	10.82	12.2	15.2	18.3	21.3	24.4	
3	16 550						3
3.5	15 300	15 350					3.5
4	14 200	14 250					4
4.5	13 200	13 300	9 850				4.5
5	12 300	12 400	9 850				5
6	9 500	9 650	9 850	7 900			6
7	7 400	7 550	7 750	7 900			7
8	5 900	6 050	6 250	6 400	5 350		8
9	4 800	4 950	5 150	5 300	5 350	5 400	9
10		4 100	4 300	4 450	4 500	4 600	10
12			3 050	3 150	3 250	3 300	12
14				2 300	2 400	2 450	14
16				1 650	1 750	1 800	16
18					1 250	1 350	18
20						950	20
22						650	22

This information is not for crane operation. Operator must refer to the in – cab information for crane operation. Rated lifting capacities shown on fully extended outriggers do not exceed 75% of the tipping loads and on tires do not exceed 65% of the tipping loads.

6 850kg Counterweight -- Fully Extended Outriggers -- 360° Rotation
(All Capacities Are Listed In Kilograms)

Radius (m)	Boom Length (m)									Radius (m)
	10.82	12.2	15.2	18.3	21.3	24.4	27.4	30.5	33.53	
2.5	50 000									2.5
3	45 360	17 150	17 150							3
3.5	35 200	17 150	17 150							3.5
4	32 600	17 150	17 150	17 150	17 150					4
4.5	30 200	17 150	17 150	17 150	17 150					4.5
5	28 050	17 150	17 150	17 150	17 150	16 050				5
6	24 550	17 150	17 150	17 150	17 150	15 700	13 100			6
7	21 000	17 150	17 150	17 150	17 150	15 700	13 100	10 850		7
8	16 750	16 950	17 150	17 150	16 650	15 100	12 450	10 850	8 800	8
9	13 050	13 550	13 850	13 950	14 050	13 900	11 450	10 350	8 800	9
10		11 100	11 450	11 550	11 600	11 650	10 550	9 550	8 800	10
12			8 200	8 400	8 450	8 500	8 550	8 250	7 600	12
14				6 350	6 450	6 500	6 500	6 550	6 550	14
16				4 900	5 050	5 100	5 150	5 200	5 200	16
18					4 000	4 100	4 150	4 150	4 200	18
20						3 300	3 350	3 400	3 400	20
22						2 650	2 700	2 750	2 800	22
24							2 200	2 250	2 300	24
26								1 850	1 850	26
28								1 500	1 500	28
30									1 200	30

This information is not for crane operation. Operator must refer to the in – cab information for crane operation. Rated lifting capacities shown on fully extended outriggers do not exceed 75% of the tipping loads and on tires do not exceed 65% of the tipping loads.

6 850kg Counterweight -- On Tires -- Stationary -- Boom Centered Over Rear
(All Capacities Are Listed In Kilograms)

Radius (m)	Boom Length (m)						Radius (m)
	10.82	12.2	15.2	18.3	21.3	24.4	
3	22 350						3
3.5	20 800	17 150					3.5
4	19 400	17 150					4
4.5	16 300	16 450	13 400				4.5
5	13 850	14 000	13 400				5
6	10 450	10 600	10 800	8 700			6
7	8 200	8 350	8 550	8 700			7
8	6 600	6 750	6 950	7 100	5 950		8
9	5 400	5 550	5 750	5 900	5 950	6 000	9
10		4 600	4 850	4 950	5 050	5 100	10
12			3 500	3 600	3 700	3 750	12
14				2 650	2 750	2 800	14
16				2 000	2 050	2 150	16
18					1 550	1 600	18
20						1 200	20
22						850	22

6 850kg Counterweight -- On Tires -- Pick & Carry (1.6km/h) -- Boom Centered Over Rear
(All Capacities Are Listed In Kilograms)

Radius (m)	Boom Length (m)						Radius (m)
	10.82	12.2	15.2	18.3	21.3	24.4	
3	16 500						3
3.5	15 300	15 350					3.5
4	14 200	14 250					4
4.5	13 200	13 300	13 400				4.5
5	12 300	12 400	12 500				5
6	10 450	10 600	10 800	8 700			6
7	8 200	8 350	8 550	8 700			7
8	6 600	6 750	6 950	7 100	5 950		8
9	5 400	5 550	5 750	5 900	5 950	6 000	9
10		4 600	4 850	4 950	5 050	5 100	10
12			3 500	3 600	3 700	3 750	12
14				2 650	2 750	2 800	14
16				2 000	2 050	2 150	16
18					1 550	1 600	18
20						1 200	20
22						850	22

This information is not for crane operation. Operator must refer to the in – cab information for crane operation. Rated lifting capacities shown on fully extended outriggers do not exceed 75% of the tipping loads and on tires do not exceed 65% of the tipping loads.

Fly Attachment Lift Capacity Charts – Optional (Metric)

5 215kg Counterweight – Fully Extended Outriggers – 360° Rotation
(All Capacities Are Listed In Kilograms)

33.53m Main Boom Length 2° Fly Offset			33.53m Main Boom Length 20° Fly Offset			33.53m Main Boom Length 40° Fly Offset		
Radius (m)	Fly Length (m)		Radius (m)	Fly Length (m)		Radius (m)	Fly Length (m)	
	8.69	15.54		8.69	15.54		8.69	15.54
12	4 300		12			12		
14	4 300	2 800	14	4 300		14		
16	4 300	2 800	16	4 050		16	3 400	
18	3 900	2 800	18	3 650	2 250	18	3 300	
20	3 200	2 750	20	3 350	2 100	20	3 150	
22	2 600	2 550	22	2 800	2 000	22	2 900	1 600
24	2 150	2 300	24	2 350	1 900	24	2 500	1 550
26	1 750	1 950	26	1 900	1 800	26	2 050	1 500
28	1 400	1 600	28	1 550	1 750	28	1 650	1 450
30	1 150	1 350	30	1 250	1 550	30	1 350	1 450
32	900	1 100	32	1 000	1 300	32	1 050	1 400
34	700	900	34	800	1 050	34	800	1 200
36	500	700	36	550	850	36		950
38		550	38		650	38		750
40			40		500	40		550

This information is not for crane operation. Operator must refer to the in–cab information for crane operation. Rated lifting capacities shown on fully extended outriggers do not exceed 75% of the tipping loads and on tires do not exceed 65% of the tipping loads.

6 850kg Counterweight – Fully Extended Outriggers – 360° Rotation (All Capacities Are Listed In Kilograms)								
33.53m Main Boom Length 2° Fly Offset			33.53m Main Boom Length 20° Fly Offset			33.53m Main Boom Length 40° Fly Offset		
Radius (m)	Fly Length (m)		Radius (m)	Fly Length (m)		Radius (m)	Fly Length (m)	
	8.69	15.54		8.69	15.54		8.69	15.54
12	4 300		12			12		
14	4 300	2 800	14	4 300		14		
16	4 300	2 800	16	4 050		16	3 400	
18	3 950	2 800	18	3 650	2 250	18	3 300	
20	3 600	2 750	20	3 350	2 100	20	3 150	
22	3 050	2 550	22	3 050	2 000	22	2 900	1 600
24	2 500	2 300	24	2 700	1 900	24	2 700	1 550
26	2 100	2 100	26	2 250	1 800	26	2 400	1 500
28	1 750	1 950	28	1 900	1 750	28	2 000	1 450
30	1 450	1 650	30	1 550	1 650	30	1 650	1 450
32	1 200	1 350	32	1 300	1 550	32	1 350	1 400
34	950	1 150	34	1 050	1 300	34	1 050	1 400
36	750	950	36	800	1 100	36		1 200
38	600	750	38	600	900	38		1 000
40	450	600	40		700	40		750
42			42		550	42		550

This information is not for crane operation. Operator must refer to the in–cab information for crane operation. Rated lifting capacities shown on fully extended outriggers do not exceed 75% of the tipping loads and on tires do not exceed 65% of the tipping loads.

Link-Belt Construction Equipment Company Lexington, Kentucky www.linkbelt.com
®Link-Belt is a registered trademark. Copyright 2010. We are constantly improving our products and therefore reserve the right to change designs and specifications.